CFS2155 Design Report

By

Student Name (Uxxxxxxx)

A report presented to the School of Computing and Engineering

University of Huddersfield, UK.

In partial fulfilment of the requirements for CFS2155 Computer Programming)

Academic Year: Enter Year Here

By submitting this work I confirm that it is entirely by own and adheres to all the academic integrity guidelines set out by the University.

Abstract

The abstract is the first section in a report, but is should be the last to be written. It should contain essential information only and needs to be very concise (200 words maximum). The purpose of the abstract is to summarise the whole the report, including the key findings/outcomes so that the reader can decide whether or not they need to read it in full. The abstract should summarise methodology/procedure, results and conclusions.

Table of Contents

Abstract.....2

Table of Contents.....3

1 Introduction (choose *Heading 1* from the Styles menu).....5

1.1 Sub-heading sample (choose *Heading 2* from the Styles menu).....5

1.1.1 Sub-sub-heading (choose *Heading 3* from the Styles menu).....5

1.1.2 Sub-sub-heading (choose *Heading 3* from the Styles menu).....5

1.2 What goes in the introduction?.....5

2 An example chapter (delete this!).....6

2.1 Example of a table with a caption.....6

2.2 Example of a figure with a caption.....6

2.3 Example figure from an external source.....6

2.4 Inserting and formatting formulae.....7

2.5 Inserting code snippets/listings.....7

3 Initial Planning and Stepwise Refinement.....8

3.1 Initial Planning.....8

3.2 Stepwise Refinement.....8

4 Code Design.....9

4.1 Data storage.....9

4.2 Code structure.....9

4.3 Functionalisation.....9

4.4 Algorithm development.....9

5 Code validation.....10

5.1 Development test plan.....10

5.2 Implementation of test plan.....10

5.3 Outcomes of testing and validation.....10

5.4 Discussion about debugging and problems encounters.....10

6 Discussion.....11

7 References.....12

8 Appendix A.....13

You should update your Table of Contents by right clicking the Table of the Contents, selecting '**Update Field**' then '**Update entire table**' and then selecting **OK**.

You may need to change the font in the Table of Contents after doing an update, such as changing from all upper case to only the first letter of each word being upper case. To do so, select the text then use the Aa function next to your selection to change the letter case of a section of text. 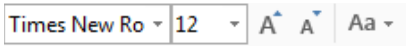

You may also notice that some bolded text appears in your Table of Contents after an update. You will need to also change this to regular font.

1 Introduction (choose *Heading 1* from the Styles menu)

1.1 Sub-heading sample (choose *Heading 2* from the Styles menu)

1.1.1 Sub-sub-heading (choose *Heading 3* from the Styles menu)

1.1.2 Sub-sub-heading (choose *Heading 3* from the Styles menu)

1.2 What goes in the introduction?

Include a detailed description of the problem you are trying to solve.

State technical objectives clearly.

It should be possible for the reader to understand the technical requirements of the assignment without having seen the assignment brief.

DO NOT copy-paste from the assignment brief – write a summary in your own words.

2 An example chapter (delete this!)

2.1 Example of a table with a caption

Table 1 This is a table caption

Title info	Title **info**	Title **info**

Note that the table caption is linked to the List of Tables. Please see that section for more information about how to update the List of Tables.

2.2 Example of a figure with a caption

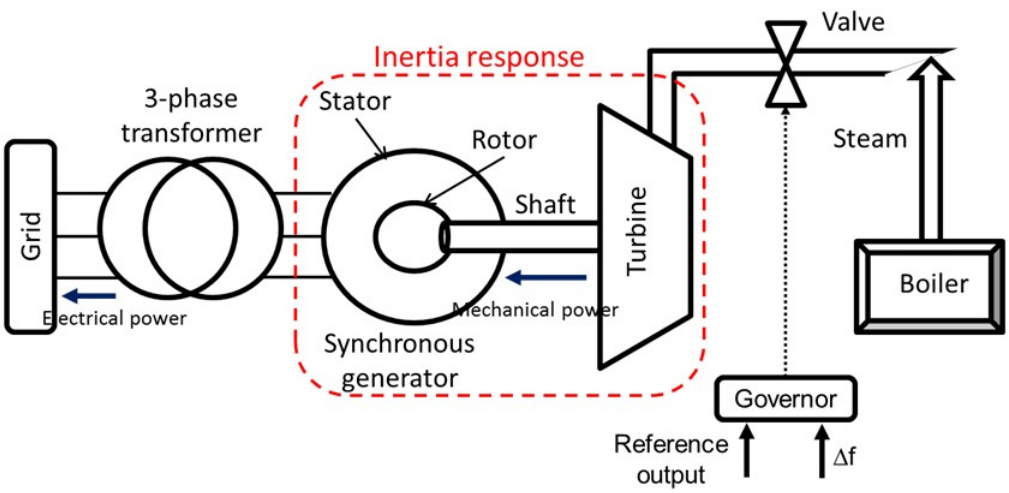

Figure 1 This is a figure caption

Note that the table caption is linked to the List of Tables. Please see that section for more information about how to update the List of Tables.

Make sure your figures are sized appropriately and consistently. Generally speaking figures look best if centre justified.

2.3 Example figure from an external source

It is essential that the source of all figures is properly identified in the figure caption. Failure to do this is an academic integrity offense and carries serious penalties.

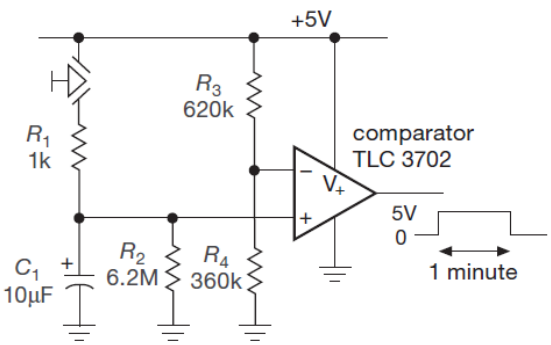

Figure 2 Example of an RC timer circuit (Horowitz & Hill, 2015)

2.4 Inserting and formatting formulae

Insert evidence of calculations using the built-in Word equation editor or a Word plug-in.

x=y/x + c becomes $x=\frac{y}{x}+c$

Mathtype is a powerful equation editor, the free demo version is more than adequate for most purposes and can be downloaded from the following link:

http://www.dessci.com/en/products/mathtype/

Also consider a numbering scheme for equations so you can refer to them easily in your writing.

$$x=\frac{-b\pm\sqrt{b^2-4ac}}{2a} \qquad (2.1)$$

Having numbered the formula it is possible to now state that equation (2.1) is the quadratic formula. The numbering scheme adopted is chapter number followed by the equation number. This numbering scheme is sensible if you have a large number of equations across several chapters.

2.5 Inserting code snippets/listings

Enter code listings using a fixed width font. Here I have used the Code style built into this template which uses the fixed width Consolas font as well as a compact line spacing to make code listings compact and easy to read (see below).

```
void main (void)
{
    cout >> "Hello World";    // Here is some code
}
```

Large listings of code should generally be placed in an appendix.

3 Initial Planning and Stepwise Refinement

3.1 Initial Planning

3.2 Stepwise Refinement

4 Code Design

4.1 Data storage

4.2 Code structure

4.3 Functionalisation

4.4 Algorithm development

5 Code validation

5.1 Development test plan

5.2 Implementation of test plan

5.3 Outcomes of testing and validation

5.4 Discussion about debugging and problems encounters

6 Discussion

- Have the objectives of the work been met?
- What are the outcomes?
- Key achievements?
- Are there any aspects of the work that would benefit from further investigation?

7 References

Horowitz, P. & Hill, W. (2005). *The Art of Electronics* (3rd ed.). Cambridge: Cambridge University Press.

All sources must be referenced – failing to do this an academic offence and has serious consequences.

University standard is APA 6th edition (similar to Harvard in style).

Other referencing styles (e.g. numeric) are acceptable for technical reports, discuss this with your supervisor. The benefit of a style such as APA 6th over a numeric style is that no re-ordering of references is required if the report is edited.

The University library has provided some guidance on the APA 6th referencing scheme, available here:

https://www.hud.ac.uk/library/finding-info/apa-referencing/

8 Appendix A

Anything which is not a direct and essential part of the narrative should be placed in this section. If it impacts upon the flow of the narrative then put it in an appendix. Examples of items that might be considered for conclusion in an appendix include:

- Large tables raw data
- Circuit schematics
- **Code listings**
- Bill of materials
- CAD renderings
- PCB layouts

Use separate appendices to group similar item. For instance, circuit schematics and PCB layouts might be grouped into Appendix A and Appendix B respectively.